C.E.C. MASK RETRO.

This procedure should take about 2 to 2 1/2 hours, after you read though the instructions and are prepared when you start, preferably on a Tues, Wed, Thurs. This will allow us to provide you with additional support. What's that saying? "If you read the instructions all else wouldn't fail."

Tools needed:

- instructions
- center-hole punch
- 11/32 wrench
- 1/2 wrench
- flat screwdriver
- 2mm allen wrench
- 7/32 drill bit
- pencil or pen
- hammer
- 3/8 wrench
- 7/16 wrench
- phillips screwdriver
- measuring tape
- drill motor
- 3/16 drill bit
- fur brush

Supplies provided: 2 sets of 10-24 X 1 1/4" screw w/washer & nylock nut
1 set of 10-24 X 1" screw w/washer

Supplies needed:

- all-purpose cleaner
- Lubriplate
- rags

Step 1: Read the instructions to get an understanding of the procedure and to be prepared. Check to make sure you have all the parts, tools, and supplies you need. **Suggestion:** P.M. and repair CEC the day before you install the new mask.

Step 2: Air down character. Remove old mask, ears, head helmet, and tux.

Step 3: Remove old mouth lever (2mm allen wrench).
Step 4: If not already done, repair, clean, and lubricate head assembly.

Step 5: Take the new mask and align it so that the eyes are centered in the eyesockets and the eyelids open and close without rubbing the mask. Then lift up the fur flap between the eyesockets of the mask. Using the (pencil or pen) mark the screw hole on the head frame.

Step 6: With center punch and hammer mark hole for drilling.
Step 7: Using 7/32 drill bit, drill the marked hole, then insert the barrel nut.

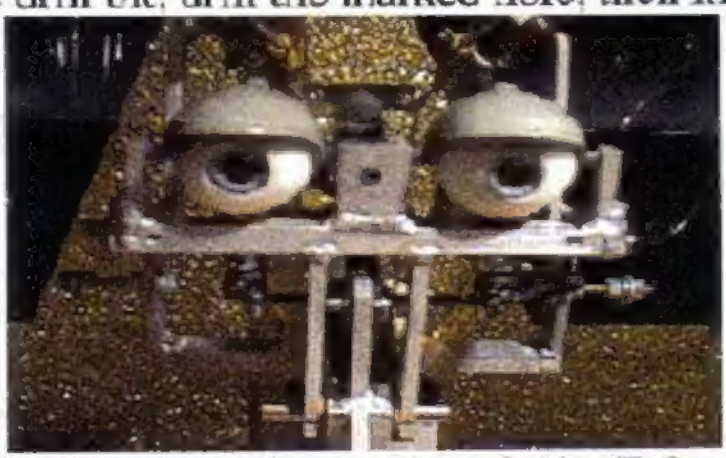

Step 8: On the back of the head-frame, there is the T-frame for the mouth cylinder. From the bottom of the top of the "T" measure down 3/4" and in the center of the frame mark for a hole, then 3/4" lower mark for another hole in the center of the frame.

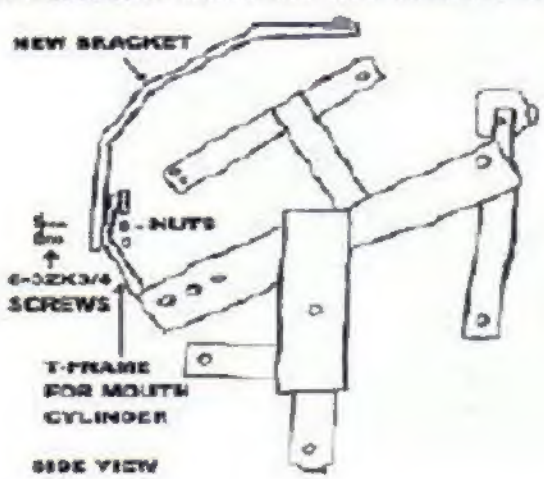

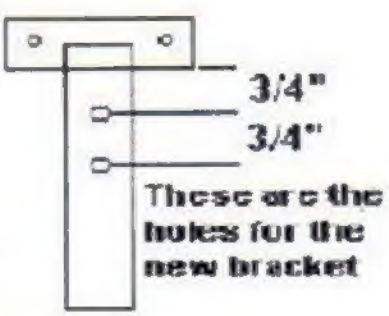

This is the T-frame for the mouth cylinder

Step: 9 Using center punch and hammer mark holes for drilling.

Step: 10 Using a 3/16" drill bit, drill the marked holes. Insert the 10-24 X 1 1/4" screws with the heads and washers on the outside of the frame and the nylock nut on the inside of the frame.

Step: 11 Installing mouth lever and jaw: Loosen the two screws under the tongue and remove jaw from mouth lever. Align mouth lever with hole in frame and insert mouth lever pin. (do not forget the spacer washers.) Then tighten the 2mm set screws with the allen wrench. Then slip the top of the mouth lever into mouth cylinder clevis and insert fast pin w/load washer. Reinstall jaw to mouth lever, (leaving screws slightly loose).

Step 12: Installing the mask: Slip the new head frame bracket under the head and washer of the screw on the back of head frame. Then snug screws to frame, but not tight. Then insert 10-24 X 1" screw w/washer into hole in mask between eyesocktes, align the mask so that the 10-24 X 1" screw will screw into the barrel nut, then screw it in. Now snap the 3 snaps of the new head frame bracket to the snaps inside the new mask. Then align mask properly and tighten the two screws on the back of the head frame.

Step 13: Installing the black stabilizers: Snap the female end of the stabilizer to the male snap on the head frame, where the eye well of the old mask use to snap. Then snap the male end of the stabilizer to the female snap in the cheek of the new mask.

Step 14: Install the back of the head by slipping the back head shell into the back of the mask, pressing slightly to make sure the velcro sticks properly. Next pull the fur around the back of the head and snap it into place.

Step 15: Checking the mouth movement manually: Manually move the jaw up and down, checking for center alignment, rubbing, closing to much or not enough. Adjust properly then tighten screws under the tongue, then velcro tongue back.

Step 16: Checking movement with the computer: The reason for this is as usual to check the movements for proper speed, or rough movement, and to check the lengths of the range of motion. First air up the charter, then power up the computer.

A. On the LCD display push the "enter" button twice. It will show.
   DIAGNOSTICS
   VCR ADJUST

B. Then push the "down" button once. It will show.
   DIAGNOSTICS
   CHUCK E CHEESE

C. Next push the "enter" button twice. It will show.
   CHUCK E CHEESE (on/off flashing)
   MOUTH

This will start the mouth movement. To stop the movement, just push the "enter" button once. Make the proper adjustments, and repeat this step as many times as needed.

Step 17: Installing ears: Using the old screws, nuts, and washers, bolt the ears to the ear levers, making sure the ears go up.

Step 18: Checking the ear movements: Use the same procedure as the mouth movement except Step C (see following). Check and adjust both ears.

C. Push the "enter" button once. It will show.
   CHUCK E CHEESE
   MOUTH

D. Push the "down" button" once. It will show.
CHUCK E CHEESE
LEFT EAR
Push the "enter" button once to start the movement.

E. Or push the "down" button twice. It will show.
CHUCK E CHEESE
RIGHT EAR
Push the "enter" button once to start the movement.

F. Push the "enter" button once more and it will stop the Movement, and return you to Step A.

Repeat this step as many times as needed.

Step 19: Check the rest of the head movements, using the same procedure as above or a Diagnostics tape. After checking and properly adjusting everything, finish putting Chuck back together again. Clean and brush Chuck.

Step 20: Pick up and clean area.

Step 21: Start show.

Step 22: Have a Great CEC Day!!

If you have any question call Robert at (972) 258-5557.

CHUCK E. CHEESE MASK RETROFIT CONVERSION GUIDE

Date of Origin: November 1999
Archived: 2-7-13
Submission by PizzaCam
Version 1.0

The documents contained herein are for educational use only. Please do not replicate, redistribute, or make any unauthorized printings. All intellectual property including characters, artwork, photography, and slogans are trademark and/or copyright their respective owners.